名称	PB11系列/AE HM HR/250508
尺 寸	84*82*145 (mm)(内尺寸)
备注	绿色参考#00ff00灰色参考#C8C9CA

主图上UV

84MM

82MM

145MM

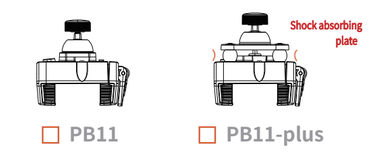

☐ PB11 ☐ PB11-plus

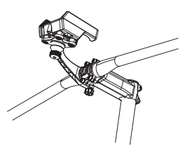

☐ AE

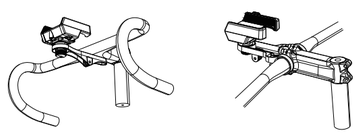

☐ HR ☐ HM

Made in China RoHS

Lock

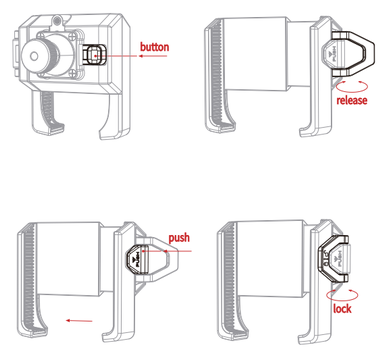

(1) Press the button to release the bracket
(2) Leave the handle be released
(3) Press the handle to fit the size of the phone
(4) Close the handle to lock the phone

PHONE HOLDER

PB11

Multi-Size Support

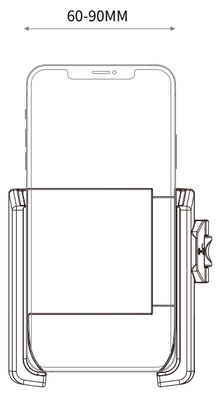

Item: Phone Holder
Compatible phone: universal phones (suitable for 4.7-7inch phones)
Suitable vehicles: electric vehicler, Bicycles

▪ Patented technology ▪ Shock absorption ▪ Quick loosening

PB11/AE HM HR/250508