| | |
|---|---|
| 名称 | PB11系列/BS/AD ET G/250722 |
| 尺 寸 | 100*88*91 (mm)(内尺寸) |
| 备注 | 绿色参考#00ff00灰色参考#C8C9CA |

主图上UV

100MM

88MM

91MM

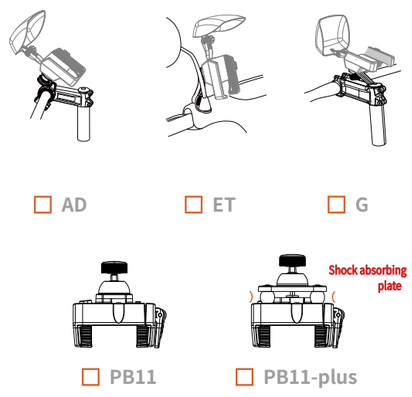


Made in China

RoHS

## Lock

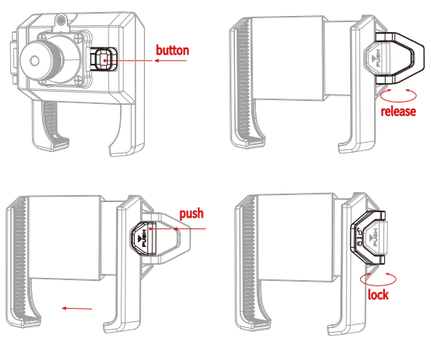


(1) Press the button to release the bracket

(2) Leave the handle be released

(3) Press the handle to fit the size of the phone

(4) Close the handle to lock the phone

## PHONE HOLDER

PB11 BS

- Patented technology
- Shock absorption
- Quick loosening

## Multi-Size Support

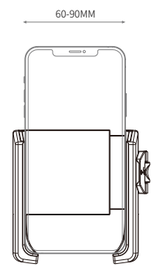


**Item:** Phone Holder
**Compatible phone:** universal phones
(suitable for 4.7-7inch phones)
**Suitable vehicles:** motorcycles,electric vehicler,
Bicycles,Scooters

PB11/BS/AD ET G/250722